SUMITOMO

LS-118RH5 Basic Machine

Upper Machinery

UPPER FRAME: All-welded, precision machined unit.

TURNTABLE BEARING WITH INTEGRAL RING GEAR: Outer race is bolted to upper frame, inner race with internal ring gear is bolted to lower frame. Swing pinion meshes with internal, integral ring gear. A machined surface is provided for mounting turntable bearing.

CONTROL SYSTEM: Remote controlled hydraulic servo for main hoist, aux. hoist, boom hoist and travel. Mechanical linkage type for swing. Working speed can be precisely controlled by lever stroke.

PUMP CONTROL SYSTEM: System reducing pump displacement enables both minute operation and saving energy.

HYDRAULIC SYSTEM: System combining variable displacement axial pumps and fixed displacement gear pumps provides both independent and combined operations of all functions.

Main hoist/aux. hoist/boom hoist — Axial piston motor with counterbalance valve.
Swing motor — Axial piston motor.
Travel motor — Axial piston motors with brake valves. Spring-applied/hydraulic-released multiple disc brakes are fitted.
Hydraulic oil reservoir — 160 liter capacity.

LOAD HOIST ASSEMBLY: Front (main) and rear (aux.) operating drums. Each driven by the bi-directional, axial piston motor through reduction gear powering the rope drum in either direction for hoisting or lowering load. 3rd drum equipped as optional extra.

Clutches — Power hydraulic actuated, internal expanding, self adjusting 2-shoe type.

Brakes — External contracting band type operated by foot pedal with locking latch. For crane mode, automatic brake (spring applied, hydraulically released) is applied when control lever in neutral position. For bucket mode, free-fall is available when control lever in neutral position.

Locks — Electrically operated drum lock pawl.

BOOM HOIST ASSEMBLY: Driven by the bi-directional, axial piston motor through reduction gear powering the rope drum in either direction for hoisting or lowering boom.

Brake — Spring applied, hydraulically released multiple disc type.

Lock — Electrically operated drum lock pawl.

SWING: Driven by axial piston motor, through reduction gear.

Brake — Brake is applied by spring and released by hydraulic cylinder.

Lock — Mechanically operated pin connection frame lock.

Speed — 3.0 rpm.

OPERATOR'S CAB: Full vision compartment with safety glass panels, the completely independent cab is insulated against noise and vibration.

COUNTERWEIGHT: Removable, 2 block mounted on rear of upper frame by bolts.

POWER UNIT:

Make & Model	HINO HO6CT
Type	Water-cooled, 4-cycle diesel engine
No. of cylinders	6
Bore & Stroke	108mm x 118mm
Displacement	6,485 cc
Rated output	150 ps/2,100 rpm
Max. torque	52 kg-m/1,600 rpm
Fuel tank	290 liters

Lower Machinery

LOWER FRAME: All welded robust rolled steel, box construction.

SIDE FRAMES: All welded robust rolled steel. Connected to lower frame by links and pins.

ROLLERS: Heat treated, mounted on bushings with floating seals requiring no further lubrication.
Bottom — 9 pcs. per side frame.
Top — 3 pcs. per side frame.

DRIVE SPROCKETS: Heat treated, involute splined to drive shaft mounted on antifriction bearings.

IDLERS: Heat treated, mounted on bushings with floating seals requiring no further lubrication.

TRACKS: Heat treated, self cleaning, two lug type, multiple hinged shoes, 59 pcs. per side frame.
Shoe width — 760 mm

Tractor type link shoe (58 pcs. per side frame) is available as option.

TRACK TENSION ADJUSTER: Adjusted by hydraulic cylinders at the idler blocks. Tension can be automatically released when abnormal load occurred on tracks.

TRAVEL AND STEER: Axial piston motor with reduction gear is located at inner drive end of each crawler side frame. Each track is driven simultaneously or individually for straight-line travel, or pivot turn, or the tracks can be counter-rotated for spin turns.

Brake — Spring applied, hydraulically released multiple disc brakes applied automatically when control lever in neutral position.

Speed — Two speed range
2.0 km/h ---------- Pump control "OFF" (ordinary)
0.3 km/h ---------- Pump control "ON"

General Dimensions

A	: Height over low gantry unit	3.230m
A'	: Height over high gantry unit	5.430m
B	: Height of cab	3.105m
C	: Counterweight ground clearance	1.100m
D	: Radius of rear end	4.150m
E	: Center of rotation to boom foot pin	0.950m
F	: Center to center distance of tambler	4.840m
G	: Overall length of crawler	5.725m
H	: Height from ground to boom foot pin	1.655m
I	: Overall width of house	3.090m
J	: Ground clearance	0.410m
K	: Center to center distance of crawler extended	3.590m
	retracted	2.540m
L	: Overall width of crawler extended	4.350m
	retracted	3.300m
M	: Shoe width	0.760m
N	: Height of shoe	0.965m
O	: Tail swing radius at low gantry	4.720m

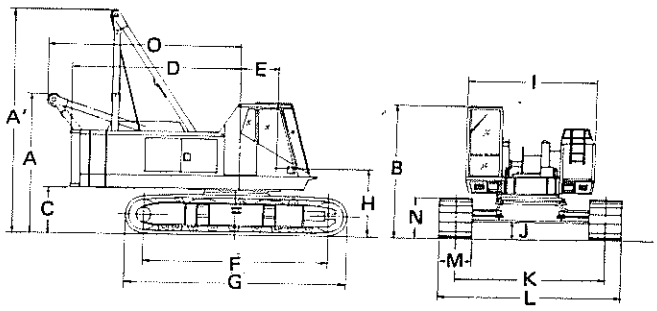

We are constantly improving our products and therefore reserve the right to change designs and specifications.

SUMITOMO (S.H.I.) CONSTRUCTION MACHINERY CO., LTD.

International sales Div., 1-21, Kanda, Nishiki-cho, Chiyoda-ku, Tokyo, Japan

SUMITOMO

LS-118RH5 Clamshell 0.6~1.2m³

CLAMSHELL BOOMS: Lattice construction; round tubular main chords, alloy hi-ten steel, with bracing of round steel tubing.

Boom connections . . . In-line pin connections.

Basic boom . . . Two-piece, 12.2m basic length; 6.1m base and 6.0m top section; 1.2m deep and 1.27 wide at connections.

Boom point machinery . . . Five head sheaves mounted on anti-friction bearings.

Boom extensions . . Available in 3.05m, 6.1m and 9.15m lengths with pendants. Maximum boom length 18.3m.

Angle main chords, with bracing of angle steel is available as option.

MAXIMUM CLAMSHELL RATING: 5.0t

COUNTERWEIGHT: 14.4t

SAFETY DEVICE: Boom over hoist limiting device, drum pawl lock for closing, holding and boom hoist drum, swing lock, safety valve in hydraulic circuit, boom angle indicator, boom back stop.

TAGLINE WINDER: Spring-wound, drum-type mounted on boom, single stage type ..... Standard
Spring-wound, drum-type mounted on boom, double stage type ..... Optional extra
Hydraulic type mounted in front of the revolving frame ..... Optional extra

GRADEABILITY: 40% (22°)
with basic boom, 1.0m³ bucket and counterweight.

LINE SPEED:

Drums	Root dia.	Type	Line speed (Holding, Closing)		Cable dia.
			Pump control "OFF" (Ordinary)	Pump control "ON"	
Holding	400mm	Parallel grooved	High 80 m/min Low 40 m/min	High 15 m/min Low 7.5 m/min	20mm
Closing	400mm	Parallel grooved	High 80 m/min Low 40 m/min	High 15 m/min Low 7.5 m/min	20mm
3rd drum (option)	320mm	Parallel grooved	65 m/min	12 m/min	16mm
Boom hoist	280mm	Parallel grooved	64 m/min	12 m/min	14mm

Notes:
1. Above line speed is based on first layer.
2. Above line speed varies with load.

GANTRY: Retractable high gantry

WORKING WEIGHT AND GROUND PRESSURE:

Shoe width	Weight	Pressure
760 mm	49.7 t	0.63 kg/cm²

Notes:
1. With basic boom, 1.0m³ bucket and counterweight.
2. Weight without counterweight and front attachment: approx. 29.8t

LS-118RH5 CLAMSHELL CAPACITIES AND WORKING RANGES:

(in metric tons)

Boom length (m)								
12.20			15.25			18.30		
R (m)	A (°)	L (t)	R (m)	A (°)	L (t)	R (m)	A (°)	L (t)
7.0	63.0	5.0						
8.0	57.5	5.0	8.0	64.6	5.0			
9.0	51.6	5.0	9.0	60.3	5.0	9.0	65.7	5.0
10.0	45.1	5.0	10.0	55.8	5.0	10.0	62.2	5.0
12.0	28.8	5.0	12.0	45.9	5.0	12.0	54.7	5.0
			14.0	33.9	5.0	14.0	46.5	5.0
						16.0	36.8	5.0

R: Working radius A: Boom angle L: Rated load

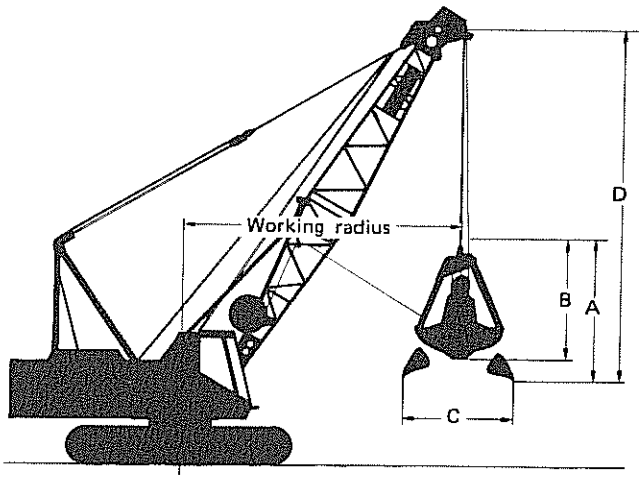

Notes:
1. Following weight of bucket plus load should not exceed above rated loads.

Bucket capacity	0.6m³	0.8m³	1.0m³	1.2m³
Bucket weight	1.6t	2.1t	2.5t	2.3t

2. Boom length shall not exceed 19.0m.
3. Apparent specific gravity of lifting material:
   Earth .....1.7~1.8t/m³
   Gravel.....1.8~2.0t/m³
4. High gantry is required and side frames must be extended for all operating conditions.

(in meters)

	Bucket capacity	0.6m³	0.8m³	1.0m³	*1.2m³
A	Bucket overall height (opened)	2.8	3.3	3.3	3.2
B	Bucket overall height (closed)	2.4	2.7	2.8	2.8
C	Bucket opening width	2.3	2.5	2.5	2.9
D	Bucket clearance	4.6	5.1	5.1	5.0

* Light duty service

We are constantly improving our products and therefore reserve the right to change designs and specifications.

SUMITOMO (S.H.I.) CONSTRUCTION MACHINERY CO., LTD.

International sales Div., 1-21, Kanda, Nishiki-cho, Chiyoda-ku, Tokyo, Japan

L 102-1085

SUMITOMO

LS-118RH5 Dragline 0.6 ~ 1.2 m³

DRAGLINE BOOMS: Lattice construction; round tubular main chords, alloy, hi-ten steel, with bracing of round steel tubing.

Boom connections ---- in-line pin connections

Basic boom --- Two-piece, 12.2m basic length; 6.1m base and 6.1m top section; 1.2m deep and 1.27m wide at connections.

Boom point machinery --- One head sheave mounted on anti-friction bearings.

Boom extensions --- Available in 3.05m, 6.1m and 9.14m lengths with pendants.

Angle main chords, with bracing of angle steel is available as option.

MAXIMUM DRAGLINE RATING: 5.0 t

GANTRY: Retractable high gantry.

WORKING WEIGHT AND GROUND PRESSURE:

Shoe width	Weight		Pressure
760 mm (Standard)	48.2 t	With basic boom	0.61 kg/cm²
	48.6 t	With18.3mboom	0.62 kg/cm²

(With boom, 1.0m³ bucket and counterweight)

COUNTERWEIGHT: 7.15 t ("A")

SAFETY DEVICE: Boom hoist limiting device, boom angle indicator, boom back stop, drum lock pawl for front, rear and boom hoist.

FAIRLEAD: Full-revolving type.

GRADEABILITY: 30% (17°)

LINE PULL AND LINE SPEED:

Drums	Root dia.	Type	Line speed (Hoisting, Lowering)		Line pull	Cable dia.
			Pump control "OFF" (Ordinary)	Pump control "ON"		
In haul (Front)	400mm	Parallel grooved	High 80 m/min Low 40 m/min	High 15 m/min Low 7.5 m/min	15.0 t	20mm
Hoisting (Rear)	400mm	Parallel grooved	High 80 m/min Low 40 m/min	High 15 m/min Low 7.5 m/min	15.0 t	20mm
3rd drum (option)	320mm	Parallel grooved	65 m/min	12 m/min	———	16mm
Boom hoist	280mm	Parallel grooved	64 m/min	12 m/min	———	14mm

Above line speed varies with load.

Drum lagging (400mm root dia./for use of 22.4mm cable dia.) is available as option for dragline.

LS-118RH5 DRAGLINE CAPACITIES AND WORKING RANGES:

(in metric tons)

	Boom length (m)		12.20			15.25			18.30		
	Boom angle (°)		30	40	50	30	40	50	30	40	50
	Rated load (t)		5.0	5.0	5.0	5.0	5.0	5.0	4.1	4.8	5.0
A	Max. dumping radius (m)	0.6m³	12.4	11.2	9.8	15.1	13.6	11.7	17.7	15.9	13.7
		0.8~1.0m³	12.5	11.3	9.9	15.2	13.7	11.8	17.8	16.0	13.8
		1.2m³	12.6	11.4	10.0	15.3	13.8	11.9	17.9	16.1	13.9
B	Working radius (m)		11.9	10.7	9.3	14.5	13.0	11.2	17.2	15.4	13.2
C	Digging radius on G.L. (m)		15.2	14.9	14.1	18.6	18.1	17.1	21.9	21.3	20.1
D	Digging depth (m)		8.3	8.0	7.5	10.8	10.5	9.7	13.3	12.9	12.0
E	Dumping height (m)	0.6~0.8m³	3.6	5.4	5.9	5.1	7.3	9.2	6.6	9.3	11.6
		1.0~1.2m³	2.8	4.6	6.1	4.3	6.5	8.4	5.6	9.5	10.8
F	Bucket clearance (m)	0.6~0.8m³	3.95								
		1.0~1.2m³	4.75								

1. Weight of bucket plus material shall not exceed above rated loads.
2. Boom length shall not exceed 18.3m.
3. High gantry is required and side frame must be extended for all operating conditions.
   Dimension C and D vary considerably depending on digging conditions and skill of the operator.
4. Apparent specific gravity of lifting material:
   Earth ----------1.7 ~ 1.8 t/m³
   Gravel ----------1.8 ~ 2.0 t/m³

Kind of bucket (manufacturer's specification)

Bucket capacity (m³)	Weight (t)
0.6	0.93
0.8	1.17
1.0	1.40
1.2*	1.60

*; medium or light duty use.

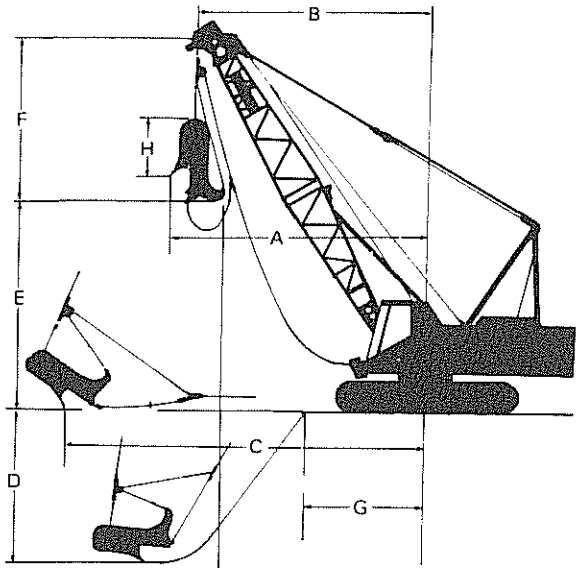

We are constantly improving our products and therefore reserve the right to change designs and specifications.

SUMITOMO (S.H.I.) CONSTRUCTION MACHINERY CO., LTD.

L267-0686

International sales Div., 1-21, Kanda, Nishiki-cho, Chiyoda-ku, Tokyo, Japan

SUMITOMO

LS-118RH5 Crane 50 metric tons

LS-118RH-5 CRANE CAPACITES (WITH CRANE BOOM):

(in metric tons)

Working radius (m)	Boom length (m)														
	9.30	12.35	15.40	18.45	21.50	24.55	27.60	30.65	33.70	36.75	39.80	42.85	45.90	48.95	52.00
3.5	50.0														
3.7	50.0	50.0													
4.0	49.7	49.6	49.5/3.9												
4.5	40.6	40.4	40.3	40.2											
5.0	34.0	33.8	33.7	33.6	33.5										
5.5	29.3	29.2	29.1	29.0	28.9	28.8									
6.0	25.3	25.2	25.1	25.0	24.9	24.8	24.7	21.2/6.6							
7.0	20.2	20.1	20.0	19.9	19.8	19.7	19.6	19.5	18.7/7.1	16.9/7.6					
8.0	17.1	17.0	16.9	16.8	16.7	16.6	16.5	16.4	16.3	16.2	15.2/8.2				
9.0	14.6	14.5	14.4	14.3	14.2	14.1	14.0	13.9	13.8	13.7	13.5	13.4	12.5/9.2		
10.0	14.1/9.2	12.6	12.5	12.4	12.3	12.2	12.1	11.9	11.8	11.7	11.6	11.5	11.4	10.0	
12.0		10.4/11.6	10.0	9.8	9.7	9.6	9.5	9.4	9.3	9.2	9.1	9.0	8.8	8.7	7.9
14.0			8.1	8.0	7.9	7.8	7.7	7.6	7.5	7.4	7.2	7.1	7.0	6.9	6.4
16.0			7.8/14.3	6.8	6.7	6.6	6.5	6.4	6.2	6.1	6.0	5.9	5.8	5.7	5.6
18.0				6.3/16.9	5.7	5.6	5.5	5.3	5.2	5.1	5.0	4.9	4.8	4.7	4.6
20.0					5.1/19.6	4.9	4.7	4.6	4.5	4.4	4.3	4.2	4.1	4.0	3.9
22.0						4.2	4.1	4.0	3.9	3.8	3.7	3.6	3.5	3.4	3.2
24.0						4.1/22.2	3.6	3.5	3.4	3.3	3.2	3.1	3.0	2.8	2.7
26.0							3.4/24.9	3.0	2.9	2.8	2.7	2.6	2.5	2.4	2.3
28.0								2.7/27.5	2.5	2.4	2.3	2.2	2.1	2.0	1.9
30.0									2.2	2.1	2.0	1.9	1.8	1.7	1.6
32.0										1.8	1.7	1.6	1.5	1.4	1.3
34.0										1.7/32.8	1.5	1.4	1.2	1.1	1.0
No of part	9	9	9	8	6	6	5	4	4	4	3	3	3	2	2

Notes:

1. Capacities shown are in metric tons and are determined according to BS (British Standard, 1981) — over the side — with machine standing level on firm supporting surface under ideal job conditions. Deductions from the lifting crane capacities must be made for weight of hook block.

Kind of hook block	50 t	15 t	5 t
Weight of hook block (t)	0.75 t	0.30 t	0.12 t

2. When operating of the main boom peak sheaves with jib on boom the following deductions in machine lifting capacities must be made.

Jib length (m)	6.10	9.15	12.20	15.25
Weight to be deducted (t)	0.75	0.90	1.05	1.20

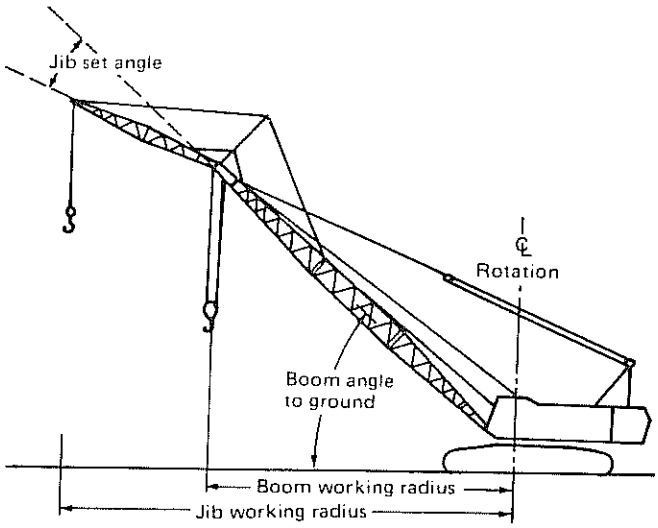

LS-118RH5 JIB CAPACITIES:

(in metric tons)

Jib length (m)	Jib set angle	Max. jib Capacities
6.10	10°	5.0
	30°	5.0
9.15	10°	5.0
	30°	5.0
12.20	10°	4.1
	30°	4.1
15.25	10°	3.3
	30°	3.3

Notes:

1. The jib capacities are equal to the crane lifting capacities of the main boom on which the jib is fixed except that they are restricted by the maximum jib capacities shown left.
2. Jib working radius does not exceed the working radius of the main boom which fits the jib.
3. Deductions from the jib capacities must be made for weight of jib hook block (0.12 t).
4. Available boom length to attach the jib is from 21.50m to 42.85m. The maximum jib length is 15.25m.
5. The jib set angle to boom must not exceed 30°

We are constantly improving our products and therefore reserve the right to change designs and specifications without notice.

SUMITOMO (S.H.I.) CONSTRUCTION MACHINERY CO., LTD.

K & T Bldg. 1-28-44, Shinkawa, Chuo-ku, Tokyo 104, Japan

Phone: (03) 3297-8833 Fax: (03) 3297-9849 Telex: J 27961 SHIKENKI

L420-0392-BS